Dec 2019 V1

OPERATION AND INSTALLATION MANUAL

Guide d’utilisation et Mode d'Emploi

WOODBURNING & SMOKE EXEMPTION MODELS

WOODLAND DOUBLE SIDED & WOODLAND DOUBLE SIDED LOG STORE MODEL PEDESTAL

The Woodland Double sided Catalyst - M00730-00-00-00-00

The Woodland Double sided Logstore Catalyst - M00733-00-00-00-00

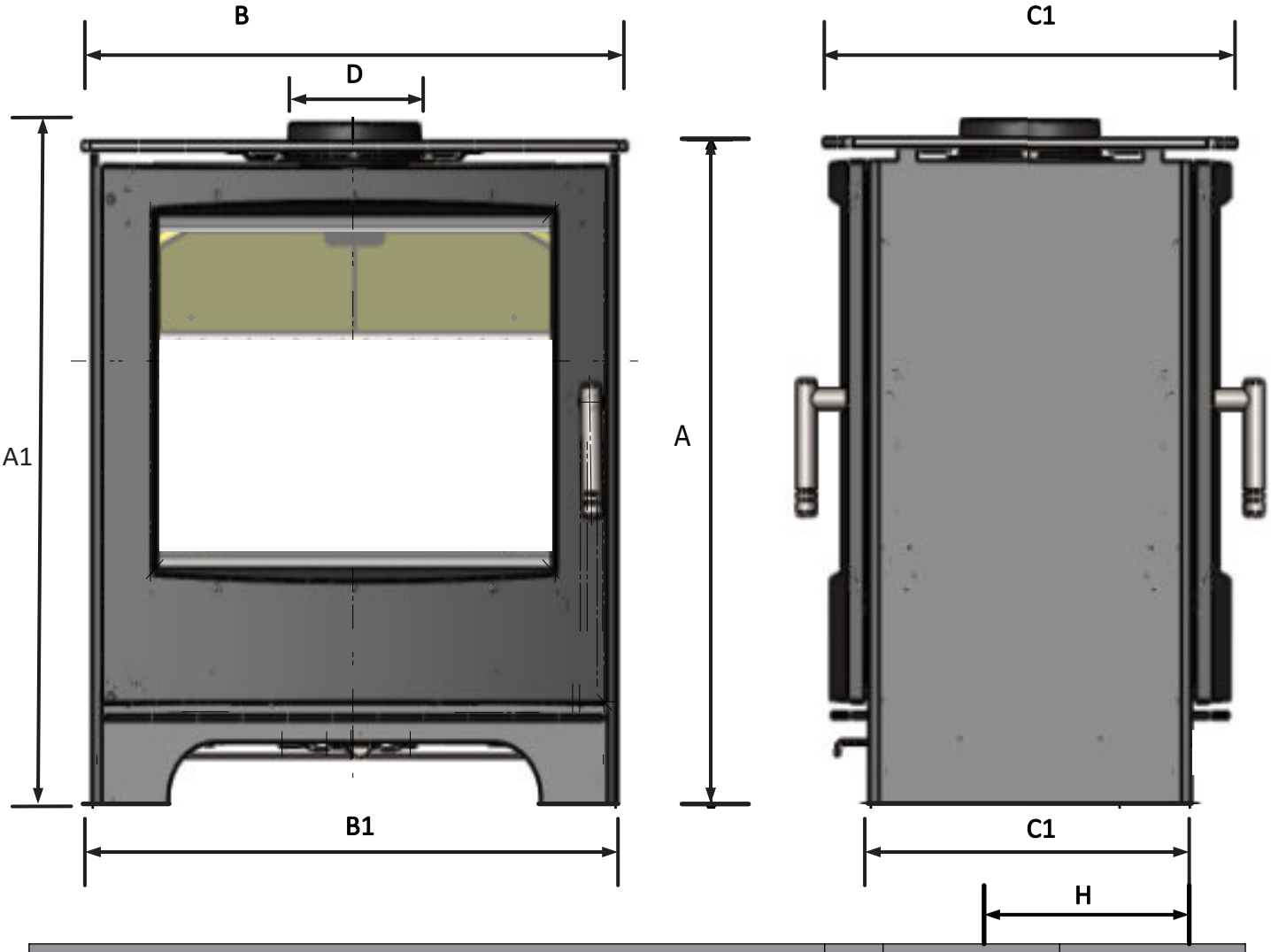

		WOODLAND DS	WOODLAND DS LS
HEIGHT /Hauteur	A	620 mm	820 mm
HEIGTH to collar / Hauteur au col	A1	635 mm	835 mm
WIDTH Top Plate/ Largeur	B	570 mm	570 mm
WIDTH Body / Largeur	B1	550 mm	550 mm
DEPTH (Top Plate) / Profondeu	C1	430 mm	430 mm
DEPTH OF BODY ONLY (excluding doors) Profondeur inc. la poignée	C3	325 mm	325mm
FLUE OUTLET DIAMETER Diamètre du conduit de fumée	D	125 mm	125 mm
DISTANCE FROM: CENTRE OF FLUE TO FRONT OF STOVE / Centre de la sortie de fumée et l'arrière du poêle	E	215mm	215mm
DISTANCE FROM: CENTRE OF AIR INTAKE TO FRONT (air controller side) / Centre de l'air d'entrée à la porte avant	H	270 mm	270 mm
DIAMETER OF AIR INLET Diamètre de l'entrée d'air		80 mm	80 mm
WEIGHT / *Poids*		85 KG	120 KG

CONTENTS

PAGE	ITEM
1-10	Installation Instructions
11-17	Operation Guidance
18-20	How to ? Exploded parts diagrams Pièces détachées, vue éclatées, assemblage

MENDIP STOVES WARRANTY

5 Year Extended Warranty

When you purchase your stove from a Mendip Stoves registered retailer, then your stove will carry a 2 year warranty as standard. The 2 year warranty can be further extended to a total warranty period of 5 years by registering your Mendip Stove within one month of the purchase date. Accordingly, the start date for the warranty period is the date of purchase. During the registration process, the Registered Retailer details will be required for your Extended Warranty to be activated. Any product purchased outside of our registered Retailer Network will carry a standard 12 month, non-extendable warranty. It is a condition of the Extended Warranty that the installation complies with the relevant Building Regulations and is carried out by a suitably trained and qualified individual (HETAS in the UK or equivalent in other countries) with the certificate of installation and proof of purchase supplied. Full terms and conditions are detailed in the Warranty Statement on the Eurostove website www.eurostove.co.uk. In the event of any conflict of information the wording on the website shall prevail. Important Note: Should any problems be experienced with your product, claims must first be submitted to the Retailer where the appliance was purchased from who will offer immediate assistance or contact Eurostove on your behalf

Register online today to activate warranty: online. http://www.mendipstoves.co.uk/SIT/StoveRegistration

INSTALLATION MANUAL

This manual refers to the Woodland Double sided, which is tested in accordance with EN 13240.

Thank you for purchasing your new stove from Mendip Stoves. Please read this manual carefully to ensure that you get maximum enjoyment and performance from your new stove and to prevent any potential operational problems. Please note that “all local regulations, including those referring to national and European Standards, need to be complied with when installing this appliance”. For further information on installing and using fireplaces and wood burning stoves, please see the relevant building regulations.
These instructions cover the basic principals to ensure the satisfactory installation of your multi-fuel stove, although detail may need slight modification to suit particular local site conditions.

IMPORTANT

Fireguards

The use a fireguard to BS 8423:2002 in the presence of children, aged and/or infirm persons is essential for their safety, even when the stove is not in use.

The glass on the stove is ceramic glass and able to withstand very high temperatures however it is not toughened and a hard impact could cause the glass to break.

INFORMATION FOR THE USER, INSTALLER AND SERVICE ENGINEER

Special care must be taken when installing a stove such that the requirements of the Health & Safety at Work Act are met.

Handling
Adequate facilities must be available for loading, unloading and site handling.

Fire Cement
Some types of fire cement are caustic and should not be allowed to come into contact with the skin. In case of contact wash immediately with plenty of water.

PREPARATORY WORK AND SAFETY CHECKS

IMPORTANT WARNING
This stove must not be installed into a chimney that serves any other heating appliance. There must not be an extractor fan fitted in the same room as the stove because this can cause the stove to emit fumes into the room.

Asbestos
This stove contains no asbestos. If there is a possibility of disturbing any asbestos in the course of installation then please seek specialist guidance and use appropriate protective equipment.

Metal Parts
When installing or servicing this stove care should be taken to avoid the possibility of personal injury.

CO Alarms:-
Building regulations require that whenever a new or replacement fixed solid fuel or wood/biomass appliance is installed in a dwelling a carbon monoxide alarm must be fitted in the same room as the appliance. Further guidance on the installation of the carbon monoxide alarm is available in BS EN 50292:2002 and from the alarm manufacturer's instructions.

Provision of an alarm must not be considered a substitute for either installing the appliance correctly or ensuring regular servicing and maintenance of the appliance and chimney system.

Stove paint Aerosols
Paint aerosols are flammable and therefore dangerous to use around a lit stove. Be sure to allow aerosols spray paints to dry and ventilate the room well before lighting the stove. The use of any aerosol around lit stove is dangerous and care must be take in handling aerosols.

IMPORTANT:
These instructions cover the basic principles to ensure the satisfactory installation of Mendip Stoves product :- Woodland Double sided Model , although detail may need slight modification to suit particular local site conditions.
In all cases the installation must comply with current Building Regulations, Local Authority Byelaws and other specifications or regulations as they affect the installation of the stove. It should be noted that the Building Regulations requirements may be met by adopting the relevant recommendations given in British Standards BS 8303, BS EN 15287 as an alternative means to achieve an equivalent level of performance to that obtained following the guidance given in Approved Document J.

Installing the Woodland Double sided stove

Adjustable legs

The Woodland DS wood burning stove is fitted with adjustable legs allowing the stove to be installed on an uneven floor. To adjust the legs, prior to installation, wind down M8 bolts using a 13mm spanner so they protrude just below the the stove legs. Tighten the locking nut once the desired level is reached. Do this with the stove tilted up from the leg being adjusted. Place the stove in position and level the stove. If the stove is to be placed on a glass floor plate it is necessary to use rubber feet so as not to scratch the glass plate. (This may cause the plate to shatter).

Securing collar to flue pipe

A physical retention of the flue pipe is required.

1. Fit the flue pipe into the flue collar. Sealing with a suitable fire cement.
2. For a top flue outlet. Lift up and support the top plate allowing enough room to drill a hole through the flue collar and into the flue pipe.
3. Secure the collar and flue pipe with a suitably sized self tapping screw.

Woodland DS Catalyst Converter

The Woodland double sided stove is fitted with a catalyst combustor. The catalytic combustor is a ceramic honeycomb coated with a "noble" metal catalyst, such as platinum and palladium. Strategically placed in the smoke path inside a wood stove, the catalytic combustion literally causes smoke to burn as fuel, creating more heat from less wood.

When operating a stove with a catalytic converter it is important to allow the stove to get to temperature in a reasonable time. When the flue temperature reaches 200c the catalyst will start to work. Once at temperature after about 20 minutes the stove can turned down.

To remove the catalyst

1. Remove brick baffles by removing pins from side wall, Baffle will then lift out.
2. Using a 13mm socket set remove 4 bolts from the bracket and remove bracket.
3. The Catalyst sits inside the cage of the bracket.

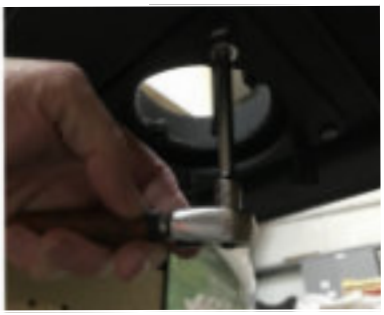

FLUE & CHIMNEY CONNECTION TO STOVE

The outlet from the chimney should be above the roof of the building in accordance with the provisions of Building Regulations Approved Document J. If installation is into an existing chimney then it must be sound and have no cracks or other faults which might allow fumes into the house. Older properties, especially, may have chimney faults or the cross section may be too large .

Mendip Stoves recommend the use of a solid fuel flue lining system for all installation into existing chimneys. All chimney systems must be used in accordance with Building Regulations Approved Document J.

If an existing chimney is used the chimney must be clear of obstruction and be swept clean immediately before installation of the stove. The chimney should be tested to confirm the chimney will provide the correct chimney pressure for the stove. If the stove is fitted in place of an open fire the chimney should be swept one month after installation to clear any soot falls which may have occurred due to the difference in combustion between the stove and the open fire. If there is no existing chimney then either a prefabricated block chimney in accordance with Building Regulations Approved Document J or a twin walled insulated stainless steel flue to BS 1856-1 . These chimneys must be fitted in accordance with the manufacturer's instructions and Building Regulations. A single wall metal flue pipe is suitable for connecting the stove to the chimney but is not suitable for using for the complete chimney. The connecting flue pipe must have a minimum diameter of 125 mm and its dimension should be not less than the size of the outlet socket of the stove. Registered smoke exempt models with a 125mm collar burning wood only can be installed on a flue of 125mm throughout. Any bend in the chimney or connecting flue pipe should not exceed 45°. 90° bends should not be used other than within 150mm of stove rear flue outlet.

Chimney Connection
In order for the stove to perform satisfactorily the chimney height must be sufficient to ensure an adequate draught to clear the products of combustion and prevent smoke problems into the room.

Tested Gas flow rates flue gas temperatures	Flue gas flow rate	Test flue gas temperature wood	@ pascals of pressure
Woodland Double sided	5.7 g/s	253°C	12

A chimney height of not less than 4.5 metres measured vertically from the outlet of the stove to the top of the chimney should be satisfactory. Alternatively the calculation procedure given in BS5854:1980 may be used as the basis for deciding whether a particular chimney design will provide sufficient draught.

If it is found that there is excessive draught in the chimney then either an adjustable flue damper or alternately a draught stabiliser should be fitted. The adjustable flue damper should not close off the flue entirely but should in its closed position leave a minimum continuous opening free area of at least 20 % of the total cross sectional area of the flue or flue pipe. Adequate provision e.g. easily accessible soot door or doors must be provided for sweeping the chimney and connecting flue pipe.

Your appliance needs to be maintained routinely, the throat plate/baffle should be cleaned regularly (monthly) . The flue pipe can be cleaned using a flexible brush. Only Use a dry cloth on external surfaces. Over time the glass may become dirty, clean with a damp cloth and polish off with damp cloth. If the stove has not been used for some time the flue should be checked for blockages before use. Do not modify the appliance; only use spares authorised by the manufacturer.

Flue outlet positions

The flue outlet should be above the roof and in such a position where the products of combustion may be discharged freely what ever the wind direction. The discharged products of combustion must not present a fire hazard. Great care should be taken where the weather surface may easily ignite.

Point where flue passes through weather surface (Note 1,2)		Clearances to flue outlet
A	At or within 600mm of the ridge.	at least 600mm above the ridge
B	Elsewhere on a roof (pitched or flat)	At least 2300mm horizontally from the nearest point on the weather surface and: a) at least 1000mm above the highest point of intersection of the chimney and the weather surface: or b) at least as high as the ridge.
C	Below (on a pitched roof) or within 2300mm horizontally to an openable rooflight or other opening. (Note 3)	at least 100mm above the top of the opening.
D	Within 2300mm of an adjoining or adjacent building, whether or not beyond the boundary. (Note 3)	at least 600mm above the adjacent building.

Notes:
1) The weather surface is the building external surface, such as its roof, tiles or external walls.
2) A flat roof has a pitch less than 10°.
3) The clearances given for A or B, as appropriate, will also apply.
4) A vertical flue fixed to an outside wall should be treated as an equivalent to an inside flue emerging at the nearest edge of the roof.

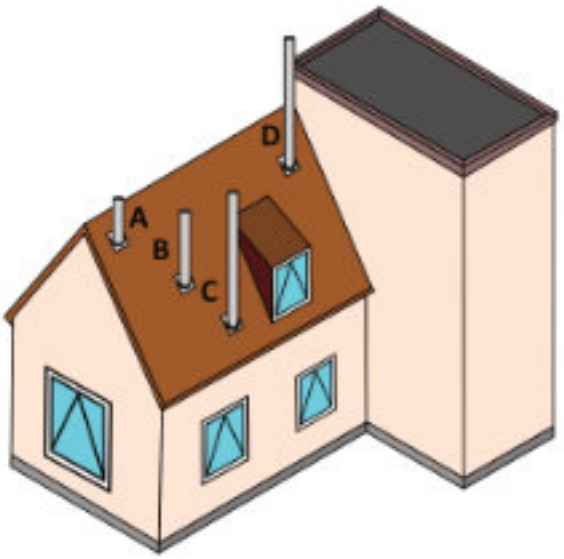

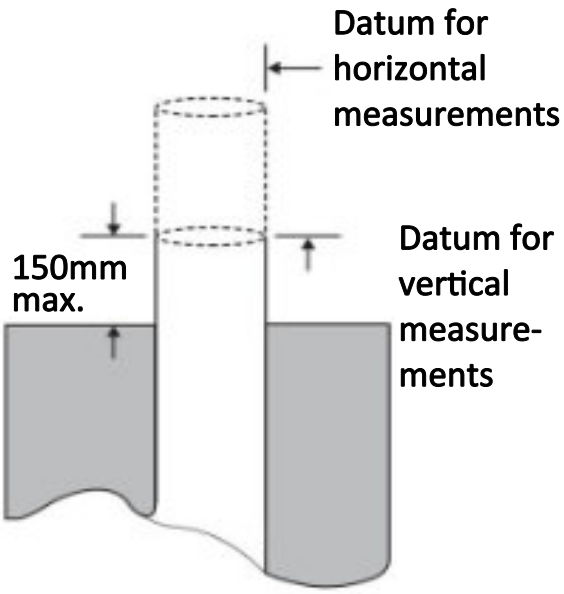

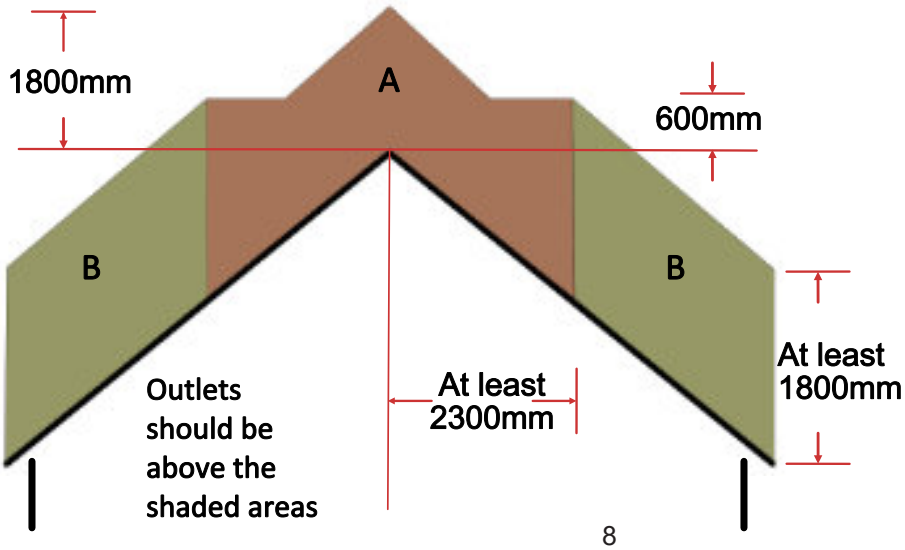

Easily ignited roof covering

Area	Location of flue outlet
A	At least 1800mm above the weather surface and at least 600mm above the ridge
B	At least 1800mm vertically above the weather surface and at least 2300mm horizontally from the weather surface

Stove Performance & Testing

Ashcott Wide is tested in accordance with EN 13240. It is recommended as suitable for use in smoke control areas when burning wood logs and when fitted with a mechanical stop to prevent closure of the secondary air control beyond :

	Output Wood	Efficiency wood	Recommended for smoke control	Mechanical air stop for SE Model	Mechanical stop 10mm from closed position.
Woodland DS	8.0kW	75.7%	YES	YES	10mm

	Log Length			Wood Reload	Weight wood load
	Length	SE dimensions LxWxD cm	Logs		
Woodland DS	35cm	25x14x11	2	1hr	1.8kg

Chimney Connection

In order for the stove to perform satisfactorily the chimney height must be sufficient to ensure an adequate draught to clear the products of combustion and prevent smoke problems into the room.

Tested Gas flow rates flue gas temperatures	Flue gas flow rate Wood	Test Flue gas Temperature wood /coal	Pascals Pressure
Woodland DS	7.2 g/sec	310 Deg C	12pa

	Output Range kW	CO@13%	Particulate matter @13% mg/nm3	Nox @13%	CxHy@13%	2022 Compliant
Woodland DS	6-9	0.08(W)	20	116	109	YES

NOTE: A chimney height of not less than 4.5 metres measured vertically from the outlet of the stove to the top of the chimney should be satisfactory. Alternately the calculation procedure given in BS 5854:1980 may be used as the basis for deciding whether a particular chimney design will provide sufficient draught.

Distance to Combustible materials

Combustible materials should not be located where the heat dissipating through the walls of fireplaces or flues could ignite it. Therefore when installing the stove in the presence of combustible materials due account must be taken of the guidance on the separation of combustible material given in Building Regulations Approved Document J and also in these stove instructions. The minimum distances to flammable materials are specified on the EN 13240 plate on the back of the stove

Distance to combustibles rear / Front	Distance to combustibles sides	Suitable for 12mm hearth
N/A	200mm	YES

MINIMUM DISTANCE TO NON-COMBUSTIBLE MATERIALS

The stove can be recessed in a suitable sized non - combustible fireplace but a **permanent free air gap of at least 50mm** must be left around the sides, the top and the back of the stove; this is to facilitate a reasonable heat output and allows access to the stove for removal and maintenance. **A clearance of 100mm will give a better heat output.** All non - combustible walls closer than 100mm to the stove should be at least 75mm thick. For practical reasons the back wall of the fireplace recess and the hearth should ideally be made of non -combustible material. When installing your stove in a non combustible chamber, combustible materials should not be located where the heat dissipating through the walls of fireplaces or flues could ignite it. Therefore when installing the stove in the presence of combustible materials due account must be taken of the guidance on the separation of combustible material given in Building Regulations Approved Document J and also in these stove instructions. The minimum distances to flammable materials are specified on the EN 13240 plate on the back of the stove.

HEARTH

The hearth should be able to accommodate the weight of the stove and its chimney if the chimney is not independently supported. The Woodland DS stove has been tested and is suitable to be installed on a 12 mm non combustible plate, such as 12 mm glass plates . Installation of all hearths should comply in size and construction so that it is in accordance with the provisions of the current Building Regulations Approved Document J.

The clearance distances to combustible material beneath, surrounding or on the hearth and walls adjacent to the hearth should comply with the guidance on the separation of combustible material given in Building Regulations Approved Document J and also in these stove instructions.

If the stove is to be installed on a wooden floor, it must be covered with a non-combustible material at least **12 mm thick**, in accordance with Building Regulations Approved Document J, to a distance of **30 cm in front of the stove** and **15 cm to each side** measuring from the door of the combustion chamber.

HOW TO FIT A WOODLAND LOGSTORE

Remove the internal components of the stove and fill the chamber with material to prevent the bricks from falling. Additionally, prepare a soft elevated surface.

Tilt the stove onto it's side to allow easy and safe access to the feet. Unscrew the levelling bolts at the foot of the stove leg.

Position the Logstore legs and use the levelling feet to secure them to the body of the stove. Use a spanner or a socket wrench to fully tighten.

Right the stove and see if the legs are in the correct position; they should be inline with the front legs of the Woodand / Loxton and have an even overhang where the legs meet the stove body. If not then loosen one leg at a time and adjust until satisfied.

COMBUSTION AIR & PERMANENT AIR VENT

In order for the stove to perform efficiently and safely there should be an adequate permanent air supply into the room in which the stove is installed to provide combustion air. This is particularly necessary if the room is double-glazed or a flue draught stabiliser is operating in the same room as the appliance. The provision of air supply to the stove must be in accordance with current Building Regulations Approved Document J. An opening window is not appropriate for this purpose. Air inlets must be positioned in such a way that they cannot be blocked. An air inlet may be a vent (the vent must be open and the capacity for the vent sufficient when the stove is lit).

Woodland DS models take all combustion air (primary, secondary & tertiary) from a single 80mm port at the bottom rear of the stove, with the door closed the air port supplies all combustion air for the appliance. This port can be connected to the outside via a 80mm pipe so the appliance does not draw combustion air from the room. However as this stove needs the door to be ajar when lighting and combustion air is taken from the room when reloading. Mendip stoves recommends the use of an additional air vent as laid out in document j .

The stove requires a permanent air vent to the room . This is to provide adequate air supply in order for the stove to operate safely and efficiently. In accordance with current Building Regulations the installer may have fitted a permanent air supply vent into the room in which the stove is installed to provide combustion air. This air vent should not under any circumstances be shut off or sealed.

SE Cleanheat- Smoke Exemption Modification

Smoke exempt (SE) models are factory fitted with an air stop on the air control slider: To adjust the smoke control settings, use an Allen key to adjust the fixing in the air intake (at the rear of the stove).
The air control on the Woodland DS Model has 40mm travel on the air control. The SE fixing is designed to prevent the air supply of the stove from being completely shut off; this promotes complete combustion and therefore acts to decrease harmful pollutants as a result of incomplete combustion. Movemnet of travel is reduced to 30mm on SE models.

DO NOT OBSTRUCT THE AIR INTAKE

COMBUSTION CHAMBERS

Mendip Stoves are fitted internally with vermiculite heat deflection panels and baffles, these are designed to ensure the maximum efficiency and are an integral part of the clean burn process of the stove. These baffles should not be removed other than for cleaning the stove. Any defective panels should be replaced, small hairline cracks do not need replacement, however small cracks can develop during use to a larger crack, if this passes through the vermiculite to the stove body then the panel must be replaced. When refuelling your stove place the wood fuel into the chamber (wearing a glove), impact from logs can cause the heat deflection panel to crack**.**

COMMISSIONING AND HANDOVER

Ensure all loose parts (bricks and grates) are fitted in accordance with the instructions given in this instruction booklet. On completion of the installation allow a suitable period of time for any fire cement/ silicon and mortar to cure, a small fire may be lit to check that smoke and fumes are taken from the stove up the chimney and emitted safely into the atmosphere.

Do not run at full output for at least 24 hours after this appliance has been installed.

On completion of the installation and commissioning ensure that the operating instructions for the stove are left with the customer. Ensure to advise the customer on the correct use of the appliance with the fuels likely to be used in the stove and notify them to use only the recommended fuels for the stove. Advise the user what to do should smoke or fumes be emitted from the stove.

The customer should be warned to use a fireguard to BS 8423:2010 +A1 : 2016 - Fireguards for fires and heating appliances for domestic use.

OPERATING YOUR STOVE - SUITABLE FUELS - Woodland Double sided

The Universal air control provides air control for the whole stove from a single lever. The Lever has two key operations

Moving the control lever in and out

Sliding the control lever in reduces and out increases the total amount of combustion air in the stove.

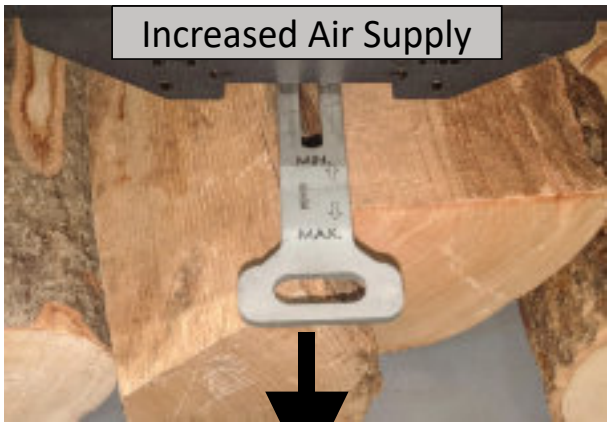

Whatever position the control is set at, the lever can have either minimum combustion air or maximum combustion air.

Moving the control lever from left to right:

By moving the control lever to the left increases the primary air mix and moving to the right increases secondary air (airwash) mix

Your stove is tested and designed to burn wood, wood briquettes can also be burnt but special account should be taken of fuel weight. Good quality wood is the most important factor in your stove working efficiently and cleanly. Always use dry split hardwood firewood (moisture content of 20% or less). The dryness of the firewood plays an important role since the use of wet wood results in poor fuel economy and may cause a tarry sooty film on the internals of the stove. Do not overload stove as this can cause excessive heat and damage the stove (see table on page 8**).**

ALWAYS KEEP FUEL LOAD BELOW TERTIARY PORTS AT REAR OF STOVE. Only use fuels approved for use on heating stoves. Do not burn liquid fuels, drift wood, finished wood, sawn wood, pallet wood, chipboard/plywood ,varnished wood or plastic coated wood, wood treated with preservatives, or any house hold waste.

DO NOT EXCEED SPECIFIED FUEL WEIGHTS. DO NOT BURN HOUSE COAL. DO NOT BURN HOUSEHOLD WASTE, THIS APPLIANCE IS NOT AN INCINERATOR.

LIGHTING YOUR STOVE FOR THE FIRST TIME

Before lighting your stove for first time make sure you have read this manual fully and acquainted yourself with the controls of this appliance.

The heat-resistant paint on your stove will cure and harden the first time you light your appliance. It is important that the first time you light your stove the room should be well ventilated. During the curing process it is important to open and close the stove door periodically (every 30mins) during the first couple of firings to preventing the door seal from sticking and coming away from the door.

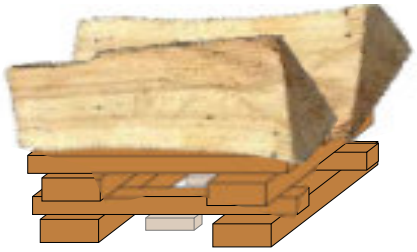

Reduced Air Supply in Secondary Position

HOW TO LIGHT YOUR WOODBURNING STOVE

Note: If the chimney is externally fitted or the stove has been installed on a larger diameter clay chimney liner then on cold days it maybe necessary to warm the flue using firelighters prior to lighting with wood.

1. Place a few smaller pieces of dry wood (kindling) in the stove on top of the non toxic firelighters, place one or two small dry split logs (¼ split) on top. Kindling stacked as in diagram allows combustion air flow freely and will aid ignition.

2. Position the Universal Air Control (UAC) lever below the stove door so that it is to the left and fully open (pulled out); this provides the stove with a mix of primary and secondary air to help establish the fire.

3. Light the firelighters and push door to closed position, latch in 1st position so the door is open 2 mm. (see picture) This provides additional combustion air for start up and reduces condensation on the door glass.

4. Once the flames from the logs are fully established , this can take up to 10 min's . The door can now be closed. Slide the UAC control in the middle position. If the stove flames begin to falter and generate smoke in chamber unlatch the door again until the fire is fully established.

5. Once the fire bed is established slide UAC control to the secondary position and push in slider by 50%, for the stove to burn cleanly plenty of secondary air is needed, do not be tempted to shut the fire down too early as this may cause smoke. At nominal heat output, expect to refuel your stove approximately once an hour. Check load weights for your model on the table on page 8.

Use the glove when operating air controls and door.

MENDIP STOVES RECOMMEND THE USE OF A FLUE THERMOSTAT TO CHECK YOUR STOVE IS NOT OVERHEATING. PLACE FLUE THERMOSTAT DIRECTLY ABOVE COLLAR OF STOVE AND REFER TO TEMPERATURE GAUGE ON PAGE 8.

The stove will get very hot during use and due care must therefore be exercised.
Please use the glove when operating air controls , door and ashpan.

RE-FUELLING WHEN BURNING WOOD

To re-fuel your stove in the cleanest way only refuel your stove when flames have died down and you have glowing embers.
Before refuelling, open air control fully (slide to the left). Unlatch door to equalise pressure with the room. Open door gently, add two pieces of wood (please check weight table page 8) and close the door. Once the flames from the logs are fully established slide air control to the right position. The stove is only suitable for intermittent use only: do not run overnight or for long periods unattended.

USE OF HOUSE COAL AND PETROLEUM COKE ARE NOT SUITABLE FOR THIS STOVE; ITS USE WILL INVALIDATE THE GUARANTEE.

BURNING WOOD IN A SMOKE CONTROL AREA

You must purchase a smoke control version of the Mendip stove which is modified slightly to comply with regulations. Any change to this modification will invalidate the stoves compliance for smoke control areas.

The Clean Air Act 1993 and Smoke Control Areas

Under the Clean Air Act local authorities may declare the whole or part of the district of the authority to be a smoke control area. It is an offence to emit smoke from a chimney of a building, from a furnace or from any fixed boiler if located in a designated smoke control area. It is also an offence to acquire an "unauthorised fuel" for use within a smoke control area unless it is used in an "exempt" appliance ("exempted" from the controls which generally apply in the smoke control area).

BURNING WOOD IN A SMOKE CONTROL AREA CONT

In England appliances are exempted by publication on a list by the Secretary of State in accordance with changes made to sections 20 and 21 of the Clean Air Act 1993 by section 15 of the Deregulation Act 2015. In Scotland appliances are exempted by publication on a list by Scottish Ministers under section 50 of the Regulatory Reform (Scotland) Act 2014. Similarly, In Northern Ireland appliances are exempted by publication on a list by the Department of Agriculture, Environment and Rural Affairs under Section 16 of the Environmental Better regulation Act (Northern Ireland) 2016. In Wales appliances are exempted by regulations made by Welsh Ministers.

Further information on the requirements of the Clean Air Act can be found here: https://www.gov.uk/smoke-control-area-rules. Your local authority is responsible for implementing the Clean Air Act 1993 including designation and supervision of smoke control areas and you can contact them for details of Clean Air Act requirements.

The ASHCOTT SE stove has been recommended as suitable for use in smoke control areas when burning wood logs. The appliance has been fitted with a modification to fix the air controls at 17% open in its minimum position, alterations should not be attempted.

Mendip smoke control stoves should not be burnt with the door left open.

*The refuelling procedure : - allow the newly charged fuel to burn with the secon*dary air control set at maximum for up 3 to 4 minutes. After this period, with flames from the logs fully established, close the secondary air supply to the low output setting. When operating at high output (secondary air set fully open) the new refuel charge does not require any boost air to establish combustion.

Refuelling on to a low fire bed

If there is insufficient burning material in the firebed to light a new fuel charge, excessive smoke emission can occur. Refuelling must be carried out onto a sufficient quantity of glowing embers and ash that the new fuel charge will ignite in a reasonable period. If there are too few embers in the fire bed, add suitable kindling to prevent excessive smoke.

Fuel Overloading

The maximum amount of fuel specified in this manual should not be exceeded, overloading can cause excess smoke.

Air controls & doors left open

Operation with the air controls fully open can cause excess smoke. The appliance must not be operated with air controls, or door left open except as directed in the instructions.

INCOMPLETE COMBUSTION

If the air controls on your stove are closed too much incomplete combustion may lead to a build-up of hard, shiny soot on the inside of your stove and glass. To prevent sooting of the chamber and glass introduce:-

1) more secondary air,
2) check that your fuel is suitable and dry.
3) that you have sufficient draw in your chimney.

It is important to check the draft conditions before lighting your stove. This may be done, for instance, by crumpling a piece of newspaper, placing it in the combustion chamber and lighting it. The draft conditions are good if the smoke is drawn away through the chimney.

OVERNIGHT BURNING

Mendip Stoves are designed to burn wood. Wood burns more efficiently and cleanly when it is burnt hotter, the typical burn cycle of a wood load is 1hr. Mendip Stoves do not recommend that their stoves are burnt overnight for this reason. As a night time regime we recommend that the fire is loaded when hot and burnt for five minutes with the secondary air control fully open until the new wood has taken and is burning, then close the air control to its operational position. On returning to the stove in the morning the fire will have burn out, reload with a firelighter and some kindling and open the air control fully to relight quickly. Beware as the ash bed could still have hot embers.

PERMANENT AIR VENT

The stove requires a permanent air vent to the room . This is to provide adequate air supply in order for the stove to operate safely and efficiently. In accordance with current Building Regulations the installer may have fitted a permanent air supply vent into the room in which the stove is installed to provide combustion air. This air vent should not under any circumstances be shut off or sealed.

WARNING NOTE

Properly installed, operated and maintained this stove will not emit fumes into the dwelling. Occasional fumes from de-ashing and re-fuelling may occur. However, persistent fume emission is potentially dangerous and must not be tolerated. If fume emission does persist, then the following immediate action should be taken:-

(a) Open doors and windows to ventilate the room and then leave the premises.
(b) Let the fire go out.
(c) Check for flue or chimney blockage and clean if required
(d) Do not attempt to relight the fire until the cause of the fume emission has been identified and corrected. If necessary seek expert advice.

The most common cause of fume emission is flue way or chimney blockage. For your own safety these must be kept clean at all times.

CO ALARM

Your installer should have fitted a CO alarm in the same room as the appliance. If the alarm sounds unexpectedly, follow the instructions given under “Warning Note” above.

AEROSOLS

Aerosols are flammable and therefore dangerous to use around a lit stove. Do not use aerosol sprays near your lit stove. The use of any aerosol is dangerous and care must be take in handling aerosols.

TROUBLE SHOOTING

1. Fire Will Not Burn - check

a) the air inlet is not obstructed in any way,
b) that chimney and flue ways are clear,
c) that a suitable fuel is being used,
d) that there is an adequate air supply into the room,
e) that an extractor fan is not fitted in the same room as the fire.

2. Fire Blazing Out Of Control - check

a) the doors are tightly closed,
b) the air controls are turned down to the minimum setting,
c) the flue damper is closed (if fitted),
d) a suitable fuel is being used,
e) the door seals are in good condition.
F) the chimney draft may be too strong
G) check ash pan seal and
H) check for ash below ash pan causing pan to seat incorrectly and clean out.

3) Soot forms on the window

a) The firewood may be too wet
b) the intake of secondary air may be insufficient
c) fire not hot enough

4) The stove fails to heat fully

a) The firewood may be too wet
b) the intake of secondary air may be insufficient

5) Smoke or odour

a) weak chimney draft
b) check for blockages in the flue pipe/chimney
c) check the height of the chimney relative to the surroundings

6) Soot in the chimney

a) The firewood may be too wet
b) intake of secondary air may be insufficient

MAINTENANCE

Mendip Stoves recommends that your model needs to have the ash removed from the stove at regular intervals (weekly if used daily). Allowing the ash pan to over flow can impede the function of the stove and can cause possible damage to the stove grate and ash pan. To remove ash pan use heat protecting glove provided . Lift and pull out of firebox chamber. Take care to support ash pan during movement. Make sure the stove is completely cold before cleaning out ash (embers can remain hot for over 24 hours). Ash must be stored in a non-combustible container and must not be mixed with other combustible waste.

Annual service

The stove should be serviced by a registered dealer once a year. The stove, the flue pipe connection and the chimney should be checked regularly by a qualified engineer. The chimney should also be checked for blockages before relighting the stove if it has not been used for an extended period of time. Insulating fire bricks checked for wear and replaced if necessary , door and ashpan rope seals should be changed annually, glass clamps & glass should checked making sure glass is correctly positioned.

To clean the inside the stove, remove all ash, soot and tar residue from the combustion chamber. Remove insulated chamber panels and baffle, dirt and soot will collect behind it and this must be cleaned out. The paint/ lacquer can wear thin in exposed places due to overheating. This, and other lacquer damage, may be repaired using Senotherm paint/lacquer spray available from your Mendip dealer. To clean the outside of the stove use a dry cloth. Your stove should be serviced annually by a registered dealer as a condition of the extended warranty of the stove, failure to maintain a service record will invalidate the extended warranty on your stove.

Prolonged non use (summer)

If the stove is to be left unused for a prolonged period of time (e.g. over the summer) then it should be given a thorough clean to remove ash and unburned fuel residues. To enable a good flow of air through the appliance to reduce condensation and subsequent damage, leave the air controls fully open. It is important that the flue connection, any appliance baffles or throat plates and the chimney are swept prior to lighting up after a prolonged shutdown period.

Spare parts & unauthorised alterations

Only the manufacturer's own components, or replacement parts recommended and approved by Mendip Stoves, shall be used for appliance servicing and repair. Any unauthorised alterations will invalidate the stove warranty and compliance with EN13240.

SWEEPING YOUR CHIMNEY & CHIMNEY FIRES

Ensure that the flue ways and chimney are swept regularly. This can be incorporated in the service regime of your appliance. Regular sweeping is essential and this means at least once a year for smokeless fuels and a minimum of twice a year for wood . If a throat plate is incorporated, it is essential that the throat plate is removed and cleaned above, all ash and debris should be removed. Ensure adequate access to cleaning doors where it is not possible to sweep the chimney through the appliance. Where a chimney has served an open fire installation previously it is possible that the higher flue gas temperature from a closed appliance may loosen deposits that were previously firmly adhered, with the consequent risk of flue blockage. It is therefore recommended that the chimney be swept a second time within a month of regular use after installation of the stove.

Chimney Fires

If the chimney is thoroughly and regularly swept, chimney fires should not occur. However, if a chimney fire does occur turn the air control setting to the minimum, and tightly close the doors of the stove. This should cause the chimney fire to go out in which case the control should be kept at the minimum setting until the fire in the stove has gone out. The chimney and flue ways should then be cleaned. If the chimney fire does not go out when the above action is taken then the fire brigade should be called immediately. After a chimney fire the chimney should be carefully examined for any damage. Expert advice should be sought if necessary.

STOVE PARTS, COMBUSTION CHAMBER, ASSEMBLY
PIÈCES DÉTACHÉES, VUE ÉCLATÉES

This section shows the parts contained in your stove, each stove has over 80 spare-parts and, each part is detailed. When new parts are required the section will allow spares to be recognised and ordered. As a further source of reference please visit www.eurostove.co.uk for latest spare-part information.

Cette section montre les pièces contenues dans votre poêle, chaque poêle a plus de 80 pièces de rechange et, chaque élément est détaillée. Lorsque de nouvelles pièces doivent la section permettra aux pièces de rechange d'être reconnus et ordonné. Comme autre source de refernece s'il vous plaît visiter pour www.eurostove.co.uk dernières informations pièce de rechange.

LOOSE PARTS / *PIÈCES DÉTACHÉES*

Always use the operating tools provided when handling parts likely to be hot when the stove is in use.
Your stove has the following parts in the stove.

1. Cast Iron grate & log retainer
2. Ashpan
3. Stove Glove
4. Top plate decorative cover plate
5. Instruction manual & warranty card
6. Vermiculite brick linings (these are integral to the stoves performance-Do not throw away)
7. Catalyst Box and Catalytic Combustor
8. Moisture absorbency bag

Toujours utiliser les outils prévus pour manipuler les pièces susceptibles d'être chaudes lorsque le poêle est en cours d'utilisation. Votre poêle comprend les éléments suivants dans le poêle.

1. Grille en fonte et arrêt de bûches
2. Bac à cendre
3. Gant
4. Plaque de décor
5. Guide d’utilisation et bon de garantie
6. Briques réfractaires, elles font partie intégrante du poêle, ne pas jeter.
7. Sac absorbant d’humidité

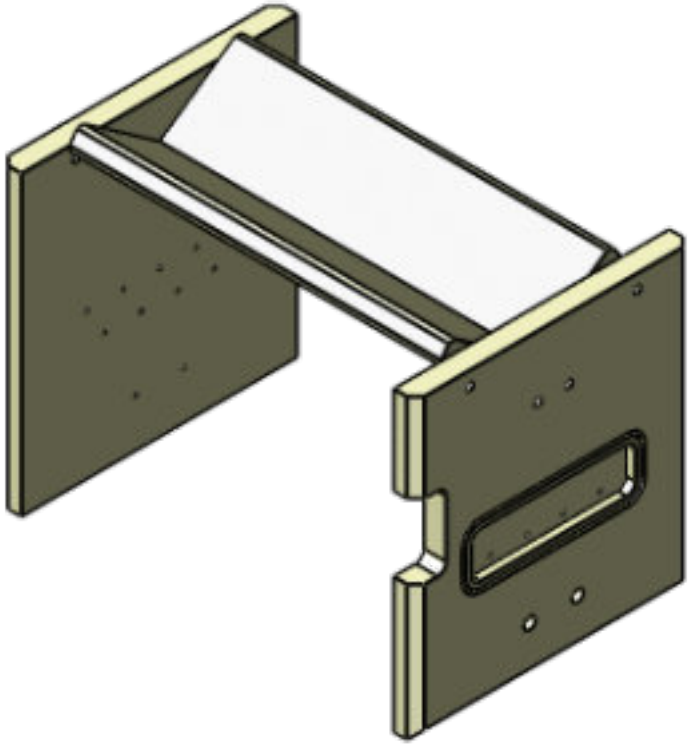

HOW TO REMOVE A VERMICULITE BRICK SET
MONTAGE ET DÉMONTAGE DE L'INTÉRIEUR

To remove a vermiculite brick set take the following steps

Pour enlever un ensemble de briques vermiculites suivez les étapes

1) Remove ashpan, grates and log retainers

Enlever le bac cendre et l'arrêt de bûches

2) Remove baffle bricks by removing 8 steel pins from the side walls. The baffle bricks will now come out easily.

Retirez les briques déflectrices en retirant 8 goupilles en acier des parois latérales. Les briques déflectrices vont maintenant sortir facilement.r.

3) Remove side bricks.

Enlevez les briques latérales

4) Remove Catalyst holder by unbolting 4 M8 bolts using a 13mm Socket

Retirez le support de catalyseur en dévissant 4 boulons M8 à l'aide d'une douille de 13 mm

To Install reverse the steps.
Pour installer, inversez les étapes.

WOODLAND DOOR ASSEMBLY
ECLATE DE PORTE

To find out more details, as well as to get prices and availability of these parts, please visit:
www.eurostove.co.uk/the-woodland-furnace-door

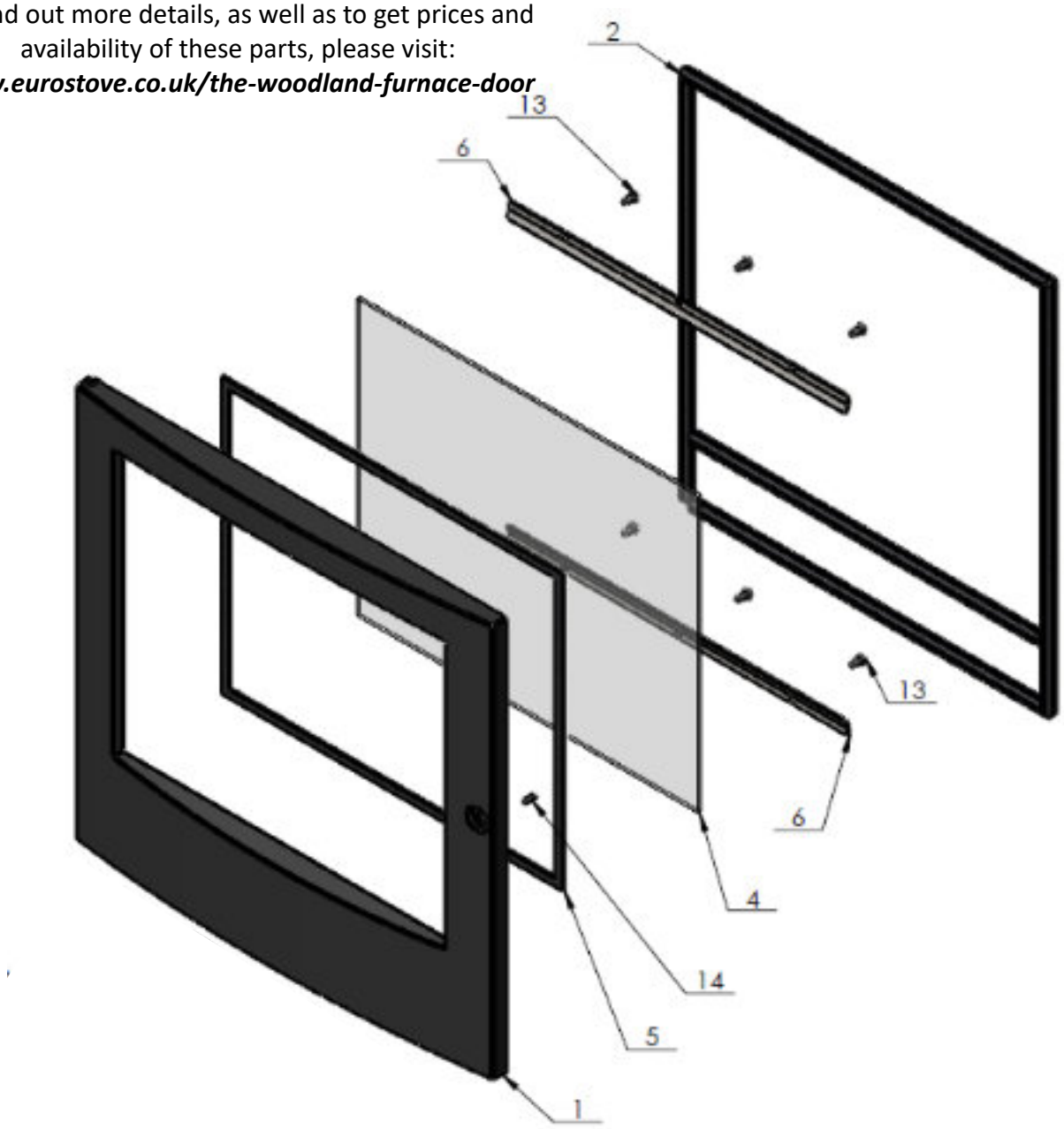

Woodland Double sided Handle assembly

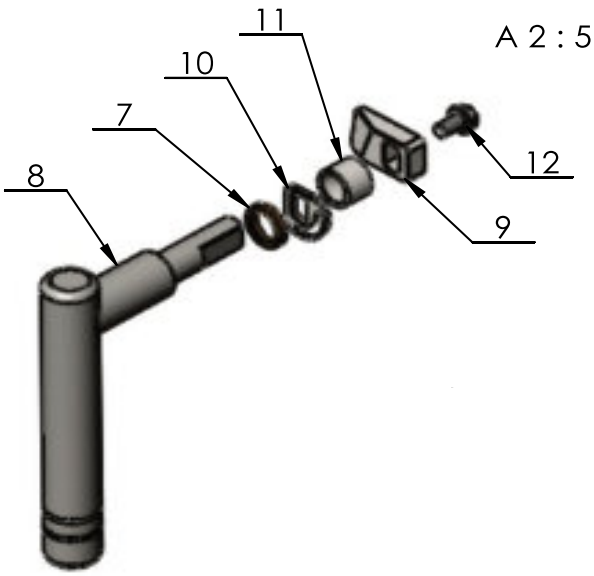

Woodland Double sided Vermiculite Brick set

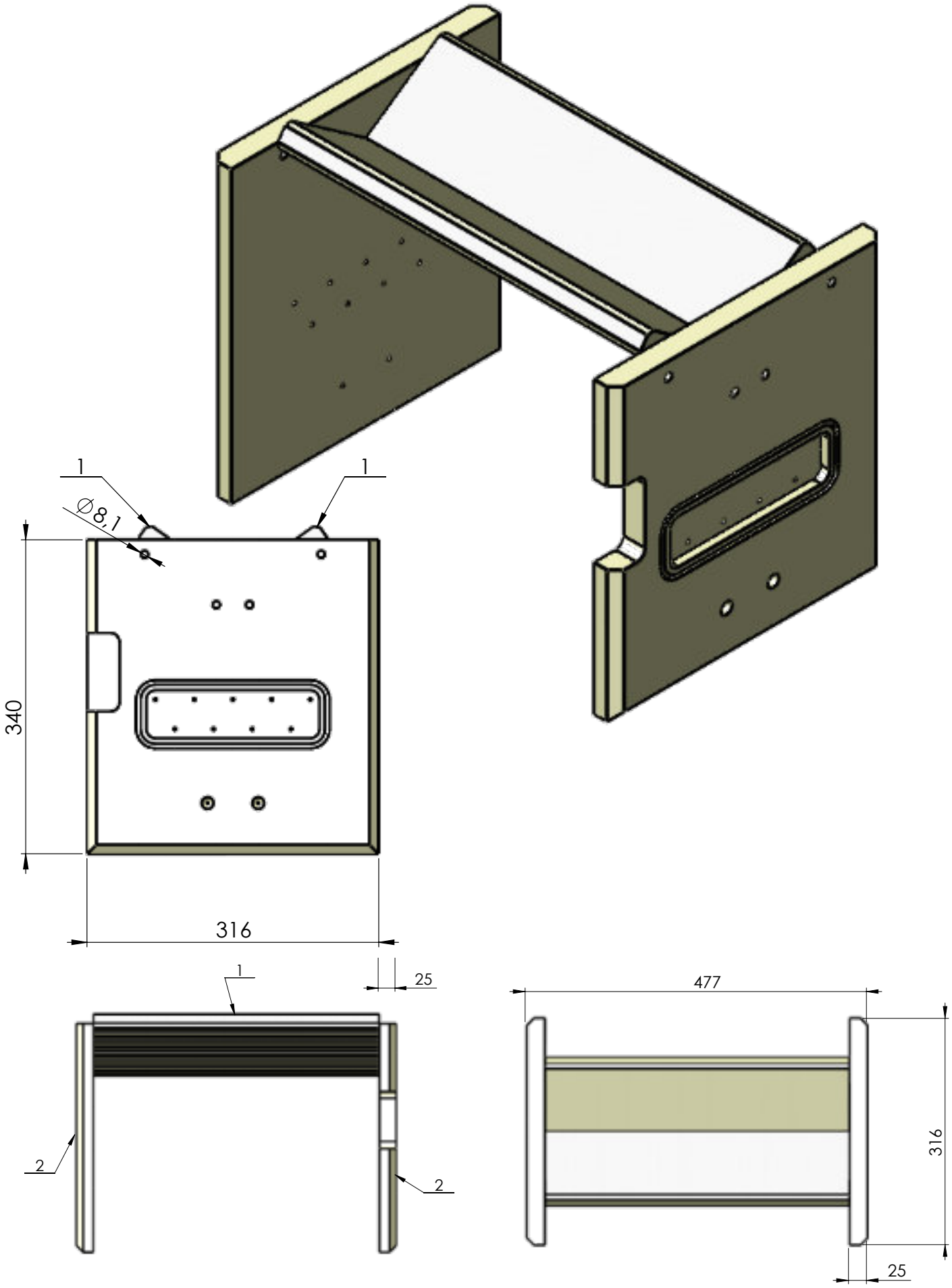

MP WOODLAND DOUBLE SIDED ENERGY LABEL M10730-49-02-99-00 VERSION 1.0 SEPT 2019

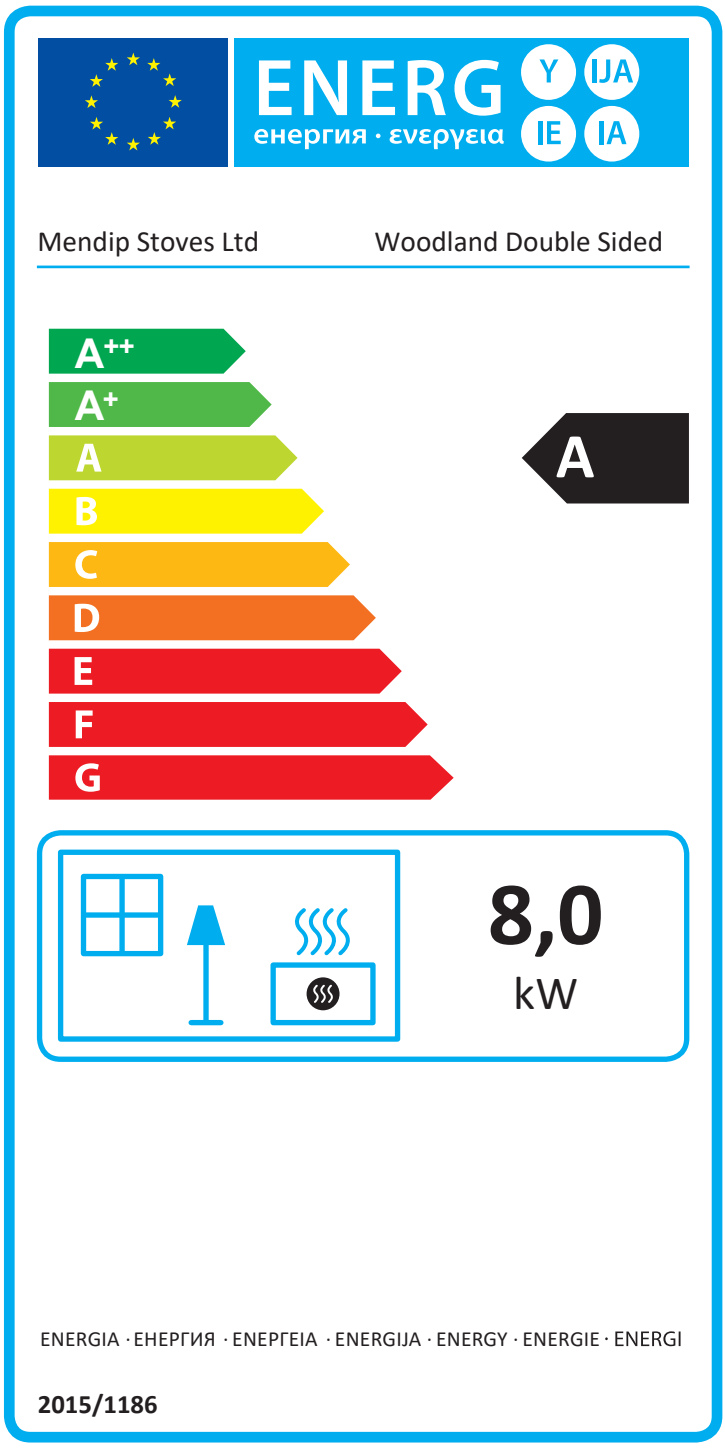

Mendip Stoves Ltd.
Unit H1
Mendip Industrial Estate
Mendip Road
Rooksbridge
Somerset
BS26 2UG

Website
www.mendipstoves.co.uk

Email
info@eurostove.co.uk

Telephone
01934 750 500

Part of the Eurostove Group